FINITE ELEMENT ANALYSIS OF THREADED CONNECTIONS

by

Paul F. Kramer

Submitted in Partial Fulfillment of the Requirements

for the degree of

Master of Science in Mechanical Engineering

in the

Mechanical Engineering

Program

YOUNGSTOWN STATE UNIVERSITY

March, 1995

Finite Element Analysis of Threaded Connections

Paul F. Kramer

I hereby release this thesis to the public. I understand this thesis will be housed at the Circulation Desk of the University library and will be available for public access. I also authorize the University or other individuals to make copies of this thesis as needed for scholarly research.

Signature:

Paul F. Kramer 3-15-95

Student Date

Approvals:

Frank J. Tarantino 3-15-95

Thesis Advisor Date

Paul H. Sukow 3-15-95

Committee Member Date

Jeffrey S. Ray 3-15-95

Committee Member Date

Peter J. Ramm 3/16/95

Dean of Graduate Studies Date

ABSTRACT

The purpose of this thesis was to accurately model threaded connections using finite element analysis. This was accomplished by machining and loading an experimental test assembly, then comparing the overall spring rate of the test assembly to results obtained by finite element analysis.

Part One of the thesis is the experimental portion. Included in this are the test procedure, data and results. From the results, an overall effective spring rate of the test assembly was derived.

Part Two of the thesis is the finite element analysis. The important aspect of the finite element analysis was the method of transmitting the forces from the screw threads to the nut threads. A specific type of element, called a gap element was utilized to transmit force from the screw threads to the nut threads. The particular gap element used has an assigned stiffness and transmits a force only when compressed.

Presented in the paper are the results obtained from various finite element models. It will be shown that a threaded connection can be reasonably modeled using gap elements between the screw and nut threads to transmit forces. The stiffness values for these gap elements can simply be either near rigid or unassigned. No method of simulating the spring rate of the thread is necessary.

It will be shown that this method will distribute the percent of load to each thread in accordance with known findings.

Included is a comparison of the finite element results to theoretical analysis on the non threaded portions of the model. Finally, recommendations for further work are presented.

TABLE OF CONTENTS

LIST OF ILLUSTRATIONS

LIST OF TABLES

INTRODUCTION

Threaded connections are often used to anchor a structure or fasten together components of a mechanical assembly. When performing a finite element stress analysis on the part, it is sometimes necessary to include in the model a representation of the threaded connection.

One method is to model the threaded connection as a spring, with the spring rate estimated by the length of the smooth shank of the bolt and the unengaged threaded portion. The engaged threads are usually ignored and assumed to be rigid. Most treatments of determining fastener spring rates include the effect on the rate by the material that is clamped by the fastener. However, if the preload of the fastener is small or non existent, this effect is eliminated and the spring rate of the engaged threads can become significant.

The purpose of this thesis was to find a method to accurately model threaded connections using finite element analysis. Once found, this method could be used to develop empirical formulas for the effective spring rate of various diameters and lengths of thread engagement.

First, the effective spring rate of a test assembly was determined by experimental methods. The results were then compared to a finite element analysis of the model. In the finite element analysis, gap elements were used to transmit the load between the screw and nut threads of the model.

PART ONE
EXPERIMENTAL METHOD

CHAPTER 1

INTRODUCTION

The purpose of the experimental model was to generate an actual force versus deflection curve of a threaded connection. From this, an effective spring rate of the connection would be determined. This value would then be used as a reference in a finite element analysis of the same model.

The experimental model was designed with the following considerations in mind: 1) Perform the test in compression rather than tension because of the relatively simpler fixturing needed for the test machine. The assumption was made that the effective spring rate of the model was the same in tension or compression. 2) The test assembly needed to be stable under load. 3) A material other than steel was needed to produce a measurable deflection. A basic designed was then developed for fabrication and testing.

CHAPTER 2

EXPERIMENTAL METHOD AND PROCEDURE

1) The experimental model was machined out of aluminum according to the design as described above. The actual dimensions of the model, including threads, were measured using calipers and an optical comparator. The dimensions are recorded in Figures 1 and 2.

2) The model was assembled as shown in Figure 3. The nuts were backed off approximately one thread to ensure that the bolt was not directly loaded.

3) Two dial indicator gages were set up to measure the deflection of the entire assembly as it was loaded. The dial indicator gages were placed 180° apart.

4) An initial preload of 200 pounds was applied and the dial gages zeroed out.

5) The assembly was loaded in increments and the deflection was recorded at each increment.

6) The test was repeated 3 additional times. The model was rotated 90° for trials #2 and #3. For trial #4, the entire fixture including the dial indicator gages was rotated 180°.

7) The readings from the left and right indicator gages were averaged for each run. Data can be found in Table 1.

8) The data was plotted into graphical form. See Figure 4.

EXPERIMENTAL MODEL
BOLT

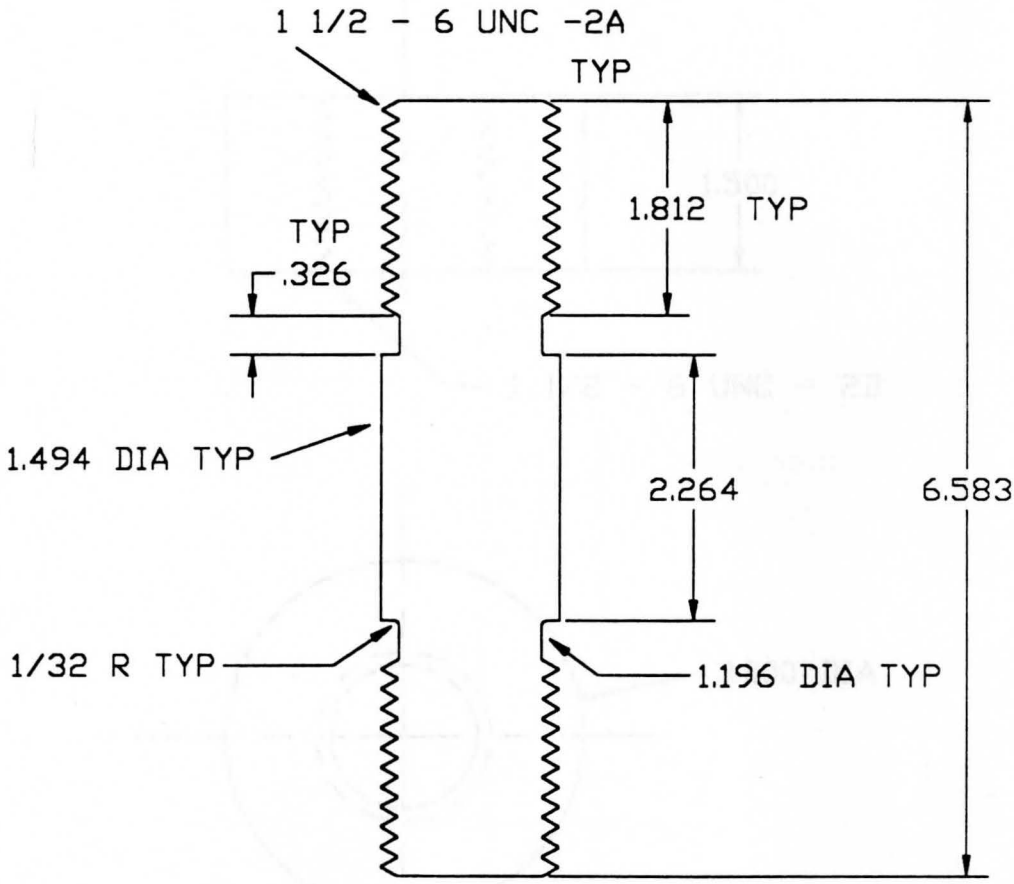

FIGURE 1

Figure 1. Experimental Model - Screw

EXPERIMENTAL MODEL

NUT

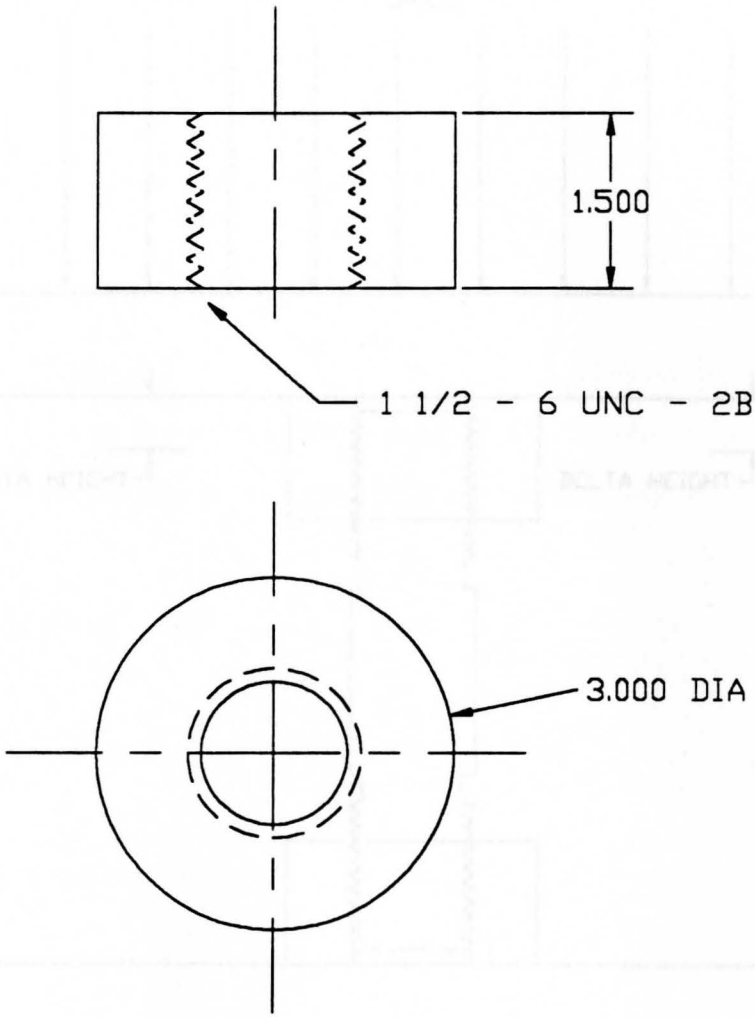

FIGURE 2

Figure 2. Experimental Model - Nut

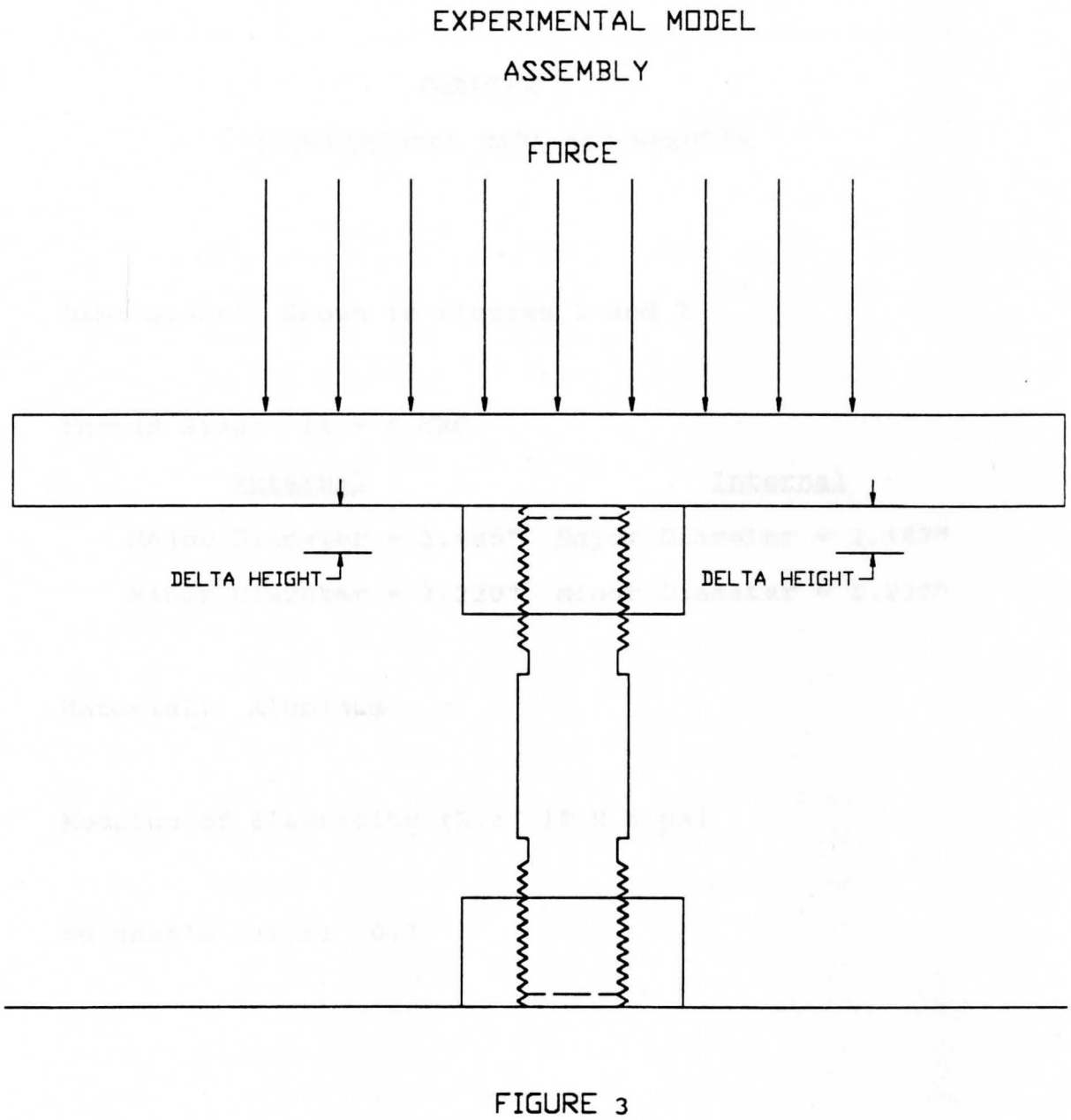

Figure 3. Experimental Test Assembly

CHAPTER 3

EXPERIMENTAL DATA AND RESULTS

Dimensions: Shown in Figures 1 and 2

Thread Size: 1½ - 6 UNC

External	Internal
Major Diameter = 1.485"	Major Diameter = 1.487"
Minor Diameter = 1.220"	Minor Diameter = 1.230"

Material: Aluminum

Modulus of Elasticity (E): 10 E 6 psi

Poisson's ratio: 0.3

Table 1. Experimental Method - Data

LOAD (IN.) (LB.)	TRIAL #1 DEFLECTION (IN.) GAGE A	GAGE B	AVG.	TRIAL #2 ROTATE PC 90 DEG. DEFLECTION GAGE A	GAGE B	AVG.
200	0.0065	0.0025	0.0045	0.0040	0.0010	0.0025
300	0.0070	0.0030	0.0050	0.0065	0.0020	0.0043
400	0.0085	0.0030	0.0058	0.0070	0.0025	0.0048
500	0.0100	0.0030	0.0065	0.0085	0.0025	0.0055
750	0.0120	0.0030	0.0075	0.0100	0.0030	0.0065
1,000	0.0130	0.0035	0.0083	0.0110	0.0035	0.0073
1,250	0.0135	0.0040	0.0088	0.0115	0.0040	0.0078
1,500	0.0145	0.0045	0.0095	0.0125	0.0045	0.0085
1,750	0.0150	0.0050	0.0100	0.0130	0.0050	0.0090
2,000	0.0160	0.0050	0.0105	0.0140	0.0050	0.0095
2,250	0.0165	0.0055	0.0110	0.0150	0.0050	0.0100
2,500	0.0170	0.0055	0.0113	0.0150	0.0050	0.0100
2,750	0.0180	0.0055	0.0118	0.0160	0.0055	0.0108
3,000	0.0185	0.0060	0.0123	0.0160	0.0055	0.0108
3,250	0.0190	0.0060	0.0125	0.0165	0.0055	0.0110
3,500	0.0195	0.0060	0.0128	0.0170	0.0060	0.0115
3,750	0.0200	0.0060	0.0130	0.0170	0.0060	0.0115
4,000	0.0200	0.0060	0.0130	0.0175	0.0060	0.0118
4,250	0.0205	0.0065	0.0135	0.0180	0.0060	0.0120
4,500	0.0210	0.0065	0.0138	0.0180	0.0060	0.0120
4,750	0.0215	0.0065	0.0140	0.0185	0.0060	0.0123
5,000	0.0220	0.0070	0.0145	0.0190	0.0065	0.0128
5,250	0.0225	0.0070	0.0148	0.0195	0.0065	0.0130
5,500	0.0230	0.0060	0.0145	0.0200	0.0065	0.0133
5,750	0.0240	0.0060	0.0150	0.0200	0.0065	0.0133
5,950	0.0240	0.0060	0.0150	0.0205	0.0065	0.0135

Table 1 - Continued

	TRIAL #3			TRIAL #4		
	ROTATE PC ADD'L 90 DEG.			ROTATE FIXTURE 180 DEG.		
LOAD	DEFLECTION (IN.)			DEFLECTION (IN.)		
(LB.)	GAGE A	GAGE B	AVG.	GAGE A	GAGE B	AVG.
200	0.0035	0.0010	0.0023	0.0005	0.0030	0.0018
300	0.0050	0.0010	0.0030	0.0010	0.0045	0.0028
400	0.0060	0.0020	0.0040	0.0015	0.0050	0.0033
500	0.0065	0.0020	0.0043	0.0015	0.0060	0.0038
750	0.0080	0.0020	0.0050	0.0015	0.0080	0.0048
1,000	0.0090	0.0030	0.0060	0.0025	0.0090	0.0058
1,250	0.0100	0.0030	0.0065	0.0030	0.0095	0.0063
1,500	0.0105	0.0035	0.0070	0.0030	0.0100	0.0065
1,750	0.0110	0.0040	0.0075	0.0030	0.0105	0.0068
2,000	0.0115	0.0040	0.0078	0.0035	0.0110	0.0073
2,250	0.0120	0.0040	0.0080	0.0035	0.0120	0.0078
2,500	0.0130	0.0040	0.0085	0.0035	0.0125	0.0080
2,750	0.0130	0.0040	0.0085	0.0035	0.0125	0.0080
3,000	0.0135	0.0040	0.0088	0.0040	0.0130	0.0085
3,250	0.0140	0.0040	0.0090	0.0040	0.0130	0.0085
3,500	0.0140	0.0040	0.0090	0.0040	0.0135	0.0088
3,750	0.0145	0.0045	0.0095	0.0045	0.0140	0.0093
4,000	0.0150	0.0045	0.0098	0.0045	0.0140	0.0093
4,250	0.0150	0.0045	0.0098	0.0045	0.0145	0.0095
4,500	0.0155	0.0045	0.0100	0.0050	0.0150	0.0100
4,750	0.0160	0.0050	0.0105	0.0050	0.0150	0.0100
5,000	0.0160	0.0050	0.0105	0.0050	0.0155	0.0103
5,250	0.0165	0.0050	0.0108	0.0050	0.0160	0.0105
5,500	0.0170	0.0050	0.0110	0.0055	0.0160	0.0108
5,750	0.0175	0.0050	0.0113	0.0055	0.0165	0.0110
5,950	0.0180	0.0045	0.0113	0.0055	0.0170	0.0113

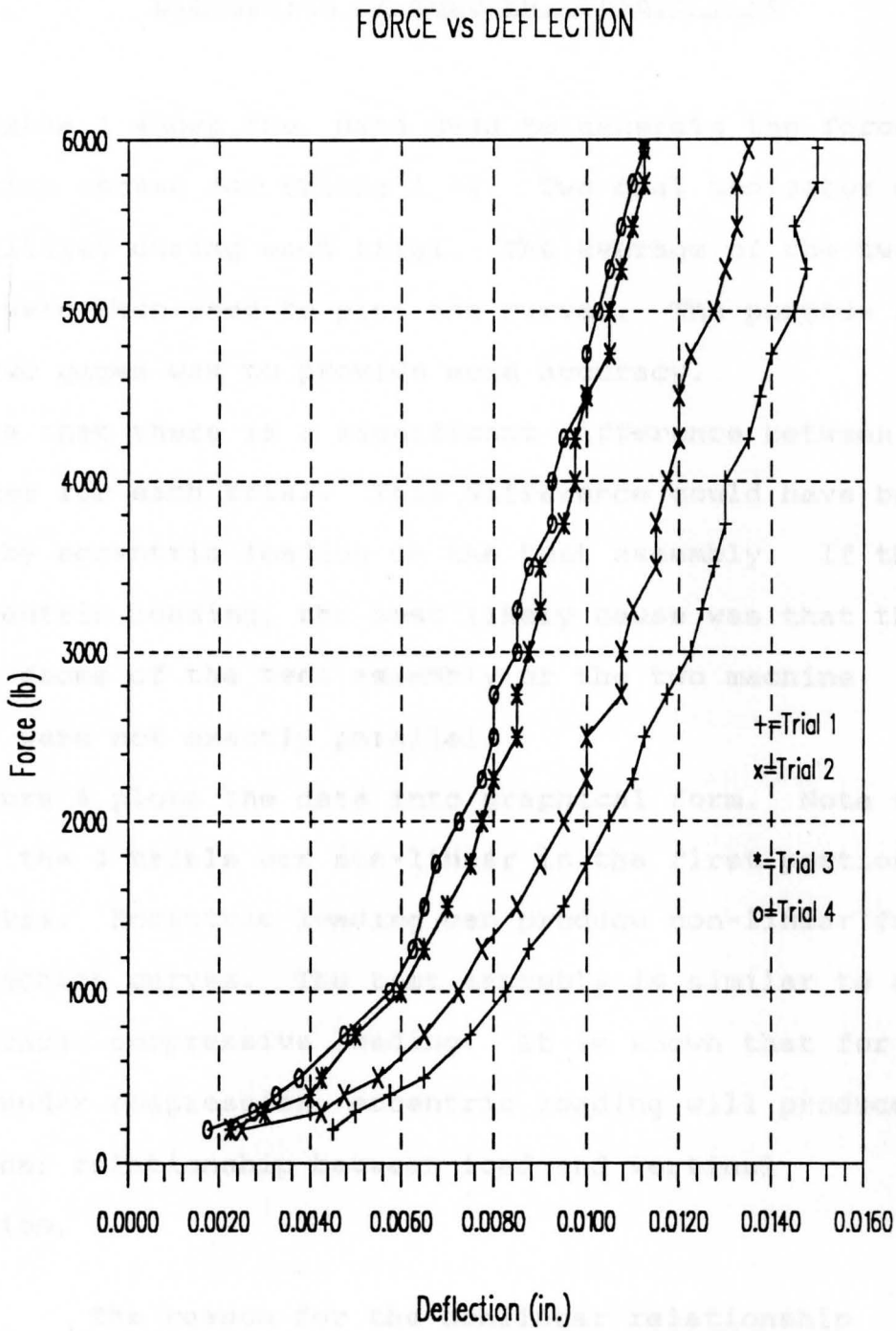

FIGURE 4

Figure 4. Graph of Force vs Deflection, Trials 1 - 4

Discussion of Results, Trials 1 -4

Table 1 shows the data used to generate the force vs deflection curves for trials 1 -4. Two dial indicator gages were utilized during each trial. The average of the two values were then used to plot the curves. The purpose of using two gages was to provide more accuracy.

Note that there is a significant difference between the two gages for each trial. This difference could have been caused by eccentric loading on the test assembly. If there was eccentric loading, the most likely cause was that the two end faces of the test assembly or the two machine platens were not exactly parallel.

Figure 4 plots the data into graphical form. Note that each of the 4 trials are non-linear in the first portion of the curves. Eccentric loading can produce non-linear force vs deflection curves. The test assembly is similar to a column under compressive loading. It is known that for a column under compression, eccentric loading will produce a non-linear relationship between load and vertical deflection.

> The reason for the nonlinear relationship between load and deflection, even when the deflections are small and Hooke's law holds, can be understood if we observe that the axial loads are equivalent to centrally applied loads plus couples acting at the ends, ...,when an axial load acts on the member, the presence of the deflections increases the bending moments produced by the axial forces (because of the additional moments). When the moments are increased, the deflections are further increased, hence the moments increase even more,

> and so on. .... This behavior results in a nonlinear relationship between the axial force and the deflections.[1]

Additional reasons for this non linearity can include slight differences in pitch of the nut and bolt threads or warpage of the threads due to overheating of the metal during machining or eccentric loading. Any imperfections in the threads of the nut and/or screw can produce a non-linear relationship.

For this reason, it was decided to repeat the experimental portion. But first the test assembly was machined in a lathe to improve the squareness of the nut faces to the length of the screw.

In addition, trials 5 -7 were performed with the test assembly placed on a ball and socket fixture on one end to minimize end effects if the machine platens were not exactly parallel. Finally, for trial 8, the ball and socket fixture was lubricated with light machine oil.

Table 2 shows the data for trials 5 - 8. Note that for trial 8, the dial indicator gages were zeroed at 1,000 pounds. The maximum applied force was increased to 7,500 pounds in trials 5 - 7 and 12,500 pounds for trial 8.

Figure 5 is this data plotted in graphical form.

---

[1] James M. Gere and Stephen P. Timoshenko, Mechanics of Materials, Second Edition. (Boston, Massachusetts: PWS Publishers), p. 568

Table 2. Experimental Method - Data

	TRIAL #5			TRIAL #6		
LOAD	DEFLECTION (IN.)			DEFLECTION (IN.)		
(LB.)	GAGE A	GAGE B	AVG.	GAGE A	GAGE B	AVG.
200	0.0000	0.0000	0.00000	0.0000	0.0000	0.0000
600	0.0045	0.0010	0.00275			
1,000	0.0065	0.0030	0.00475	0.0075	0.0030	0.00525
1,500	0.0085	0.0045	0.00650	0.0100	0.0045	0.00725
2,000	0.0105	0.0060	0.00825	0.0110	0.0050	0.00800
2,500	0.0120	0.0075	0.00975	0.0115	0.0055	0.00850
3,000	0.0130	0.0090	0.01100	0.0120	0.0060	0.00900
3,500	0.0135	0.0100	0.01175	0.0130	0.0060	0.00980
4,000	0.0140	0.0100	0.01200	0.0130	0.0070	0.01000
4,500	0.0140	0.0110	0.01250	0.0135	0.0070	0.01025
5,000	0.0140	0.0120	0.01300	0.0140	0.0080	0.01100
5,500	0.0145	0.0125	0.01350	0.0145	0.0080	0.01125
6,000	0.0150	0.0130	0.01400	0.0145	0.0085	0.01150
6,500	0.0150	0.0135	0.01425	0.0150	0.0090	0.01200
7,000	0.0160	0.0135	0.01475	0.0155	0.0090	0.01225
7,500				0.0160	0.0090	0.01250

Table 2 - Continued

LOAD	TRIAL #7 DEFLECTION (IN.)			TRIAL #8 DEFLECTION (IN.)		
(LB.)	GAGE A	GAGE B	AVG.	GAGE A	GAGE B	AVG.
200	0.0000	0.0000	0.00000			
500	0.0035	0.0005	0.00200			
1,000	0.0055	0.0020	0.00375	.00000	.00000	.000000
1,500	0.0080	0.0040	0.00600	.00075	.00050	.000625
2,000	0.0085	0.0045	0.00650	.00150	.00100	.001250
2,500	0.0095	0.0050	0.00725	.00250	.00100	.001750
3,000	0.0100	0.0050	0.00750	.00300	.00150	.002250
3,500	0.0110	0.0060	0.00850	.00375	.00175	.002750
4,000	0.0110	0.0060	0.00850	.00425	.00200	.003125
4,500	0.0115	0.0070	0.00925	.00500	.00225	.003625
5,000	0.0120	0.0075	0.00975	.00575	.00225	.004000
5,500	0.0125	0.0080	0.01025	.00650	.00250	.004500
6,000	0.0130	0.0080	0.01050	.00700	.00300	.005000
6,500	0.0135	0.0080	0.01075	.00725	.00300	.005125
7,000	0.0140	0.0085	0.01125	.00775	.00350	.005625
7,500	0.0145	0.0085	0.01150	.00800	.00375	.005875
8,000				.00850	.00400	.006250
8,500				.00900	.00400	.006500
9,000				.00950	.00450	.007000
9,500				.01000	.00475	.007375
10,000				.01025	.00500	.007625
10,500				.01050	.00550	.008000
11,000				.01100	.00600	.008500
11,500				.01125	.00600	.008625
12,000				.01150	.00650	.009000
12,500				.01175	.00700	.009375

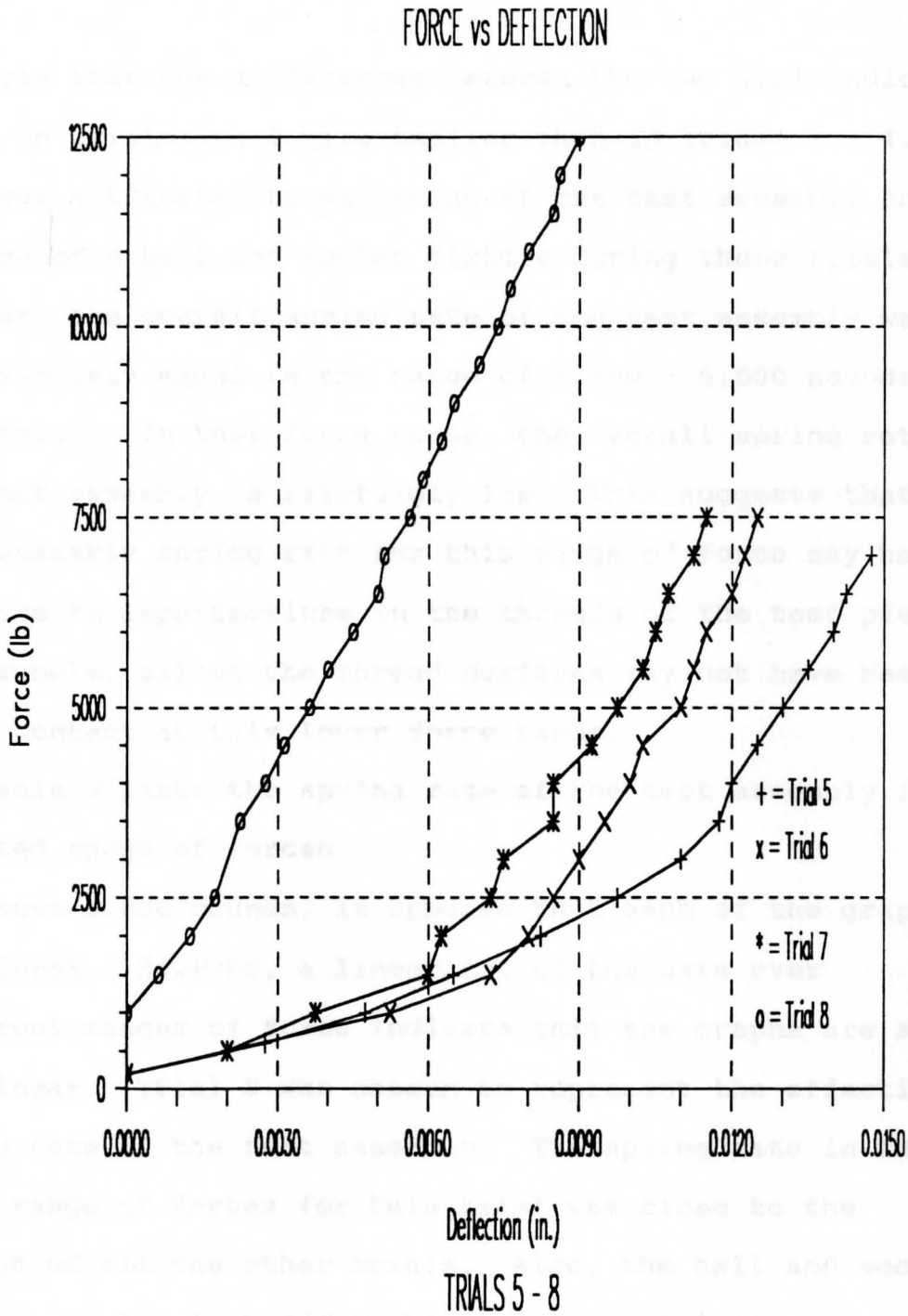

Figure 5. Graph of Force vs Deflection, Trials 5 - 8

Discussion of Results

Note that the differences between the two dial indicator gages in trials 5 - 8 were smaller than in trials 1 - 4. This was attributed to machining of the test assembly and/or the use of a ball and socket fixture during these trials. However, the overall spring rate of the test assembly was approximately equal in the range of 2,500 - 5,000 pounds for each trial. In this force range, the overall spring rate of the test assembly is relatively low. This suggests that the test assembly spring rate for this range of force may have been due to imperfections in the threads of the test pieces. For example, all of the thread surfaces may not have been in total contact at this lower force range.

Table 3 lists the spring rate of the test assembly in selected range of forces.

Above 5,000 pounds, it appears that each of the graphs are linear. However, a linear fit of the data over different ranges of force indicate that the graphs are still non-linear. Trial 8 was chosen to represent the effective spring rate of the test assembly. The spring rate in the lower range of forces for this trial was close to the average of all the other trials. Also, the ball and socket fixture was lubricated for this trial to minimize any end effects that may occur while compressing the test assembly.

As mentioned before, other contributors to the non-linearity may have included imperfections in the machining process, such as slight differences in pitch of the nut and screw or warpage of the threads during machining from overheating.

At 12,500 pounds, it was concluded that the threads should be in total contact with each other and any effects due to imperfect machining should be diminished.
To obtain the slope of the curve of Trial 8 at 12,500 pounds, the data was fit to a 2nd order polynomial and the slope of the curve was calculated at that point. The equation of the curve was found to be: $Y = 896 + 861{,}105X + 41{,}473{,}100X^2$ where Y is force (lbs) and X is displacement (in.). The slope at 12,500 pounds was found by calculating the value of the displacement at this force and entering this value into the first derivative. The value of the slope at 12,500 pounds was found to be 1,632,932 pounds per inch. See Table 3 for spring rates obtained in the trials as a function of load range.

Table 3. Test Assembly Spring Rate (lb/in.) Obtained by 1st Order Fit for Selected Range of Forces (lbs)

	Range of Force			
Trial	**2500-5000**	**5000-7500**	**7500-1000**	**10000-12500**
1	841,099			
2	1,020,720			
3	1,113,920			
4	1,023,940			
5	782,609	1,164,380		
6	1,033,420	1,571,430		
7	1,100,000	1,297,960		
8	1,107,872	1,330,460	1,375,710	1,452,230
Avg.	1,002,948	1,341,058	1,375,710	1,452,230

PART TWO
FINITE ELEMENT ANALYSIS

CHAPTER 1

DESCRIPTION OF FINITE ELEMENT ANALYSIS METHOD

Both the bolt and nuts of the experimental model were drawn in two-dimensions and analyzed as axisymmetric. Axisymmetric is defined as symmetry about the center line of the model with respect to both load and geometry. In the finite element model, the Z-axis represented the longitudinal centerline of the test assembly. The model was also symmetric about horizontal (Y-axis) midline. For reference, the X-axis in this description is normal to the plane of the paper. Hence, it was only necessary to draw one-quarter of the cross section.

Figure 6 shows the basic geometry of the model, the loading and the boundary conditions.

The decision was made to apply the load at the bolt instead of the nut. By symmetry, there is no difference where the load is applied in this case.

The software ALGOR was utilized to perform the finite element analysis.

Application of Load via Pressure Distribution vs Nodal Forces

Initially, the total load of 5,950 pounds was divided manually among the bottom nodes of the bolt. This resulted in an uneven displacement of the bottom nodes when the total

deflection was measured. Nodes closer to the centerline were displaced greater than nodes at the outer diameter of the bolt. To obtain the greatest accuracy, the load was transformed into an equivalent pressure distribution and the software automatically distributed the proper load to the nodes. With this method, the displacements of the bottom nodes were equal. The bottom nodes represent the center plane of the symmetric assembly.

One surface of the nut was restrained in the vertical or Z-direction. This represented the surface of the nut in contact with the test machine platen.

The axisymmetric analysis does not take into account the helical thread forms, but it was felt that the effect of this simplification was negligible.

Also, any friction present in the actual case was not modeled in the finite element analysis.

Gap elements on the contact surface of each thread were used to transmit forces between the bolt and nut. The next chapter describes how the stiffness values of each gap element were derived.

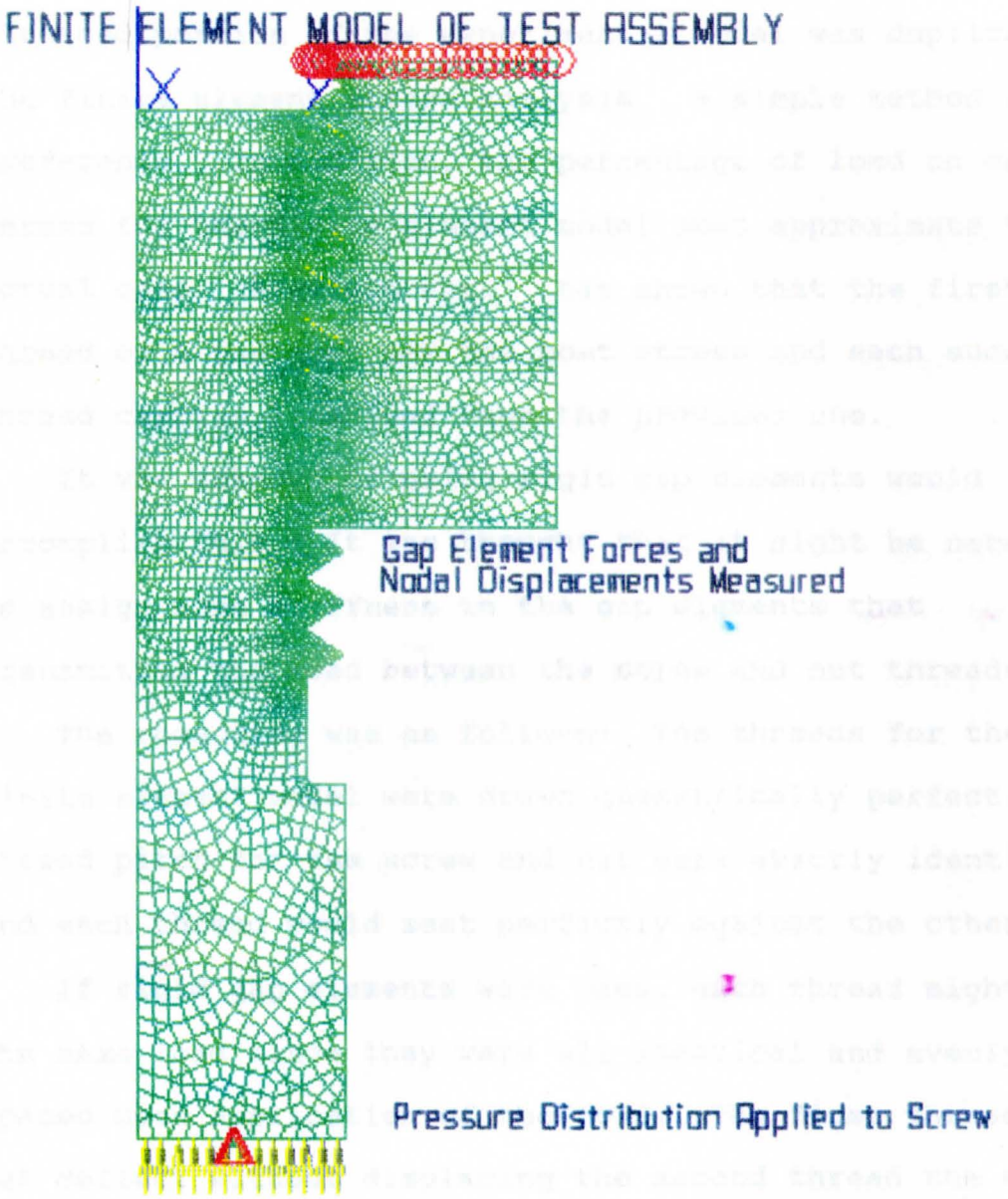

Figure 6. Finite Element Model of Test Assembly

Determination of Gap Element Stiffness - Objective

The objective was to find a method of determining gap element stiffness such that the effective spring rate of the threaded portion of the experimental model was duplicated in the finite element stress analysis. A simple method was preferable. In addition, the percentage of load on each thread for the finite element model must approximate the actual case. Previous work[2] has shown that the first thread of a fastener has the most stress and each successive thread carries less load than the previous one.

It was unknown if using rigid gap elements would accomplish this. It was thought that it might be necessary to assign some stiffness to the gap elements that transmitted the load between the screw and nut threads.

The reasoning was as follows: The threads for the finite element model were drawn geometrically perfect. The thread pitch for the screw and nut were exactly identical and each thread would seat perfectly against the other.

If rigid gap elements were used, each thread might carry the same load since they were all identical and evenly spaced upon application of the load. The first thread could not deflect without displacing the second thread the same

---

[2] A. I. Yakushev, Effect on Manufacturing Technology on the Strength of Threaded Connections. (New York, New York: The MacMillan Company, 1964)

amount and so on for each thread. Each thread would deflect the same amount and hence carry the same load.

If the gap elements between threads had some finite stiffness, the first thread could deflect a small amount more than the second thread since the gap element in between the threads compressed a small amount from the force that was transmitted through it. In this way, the first loaded thread would be stressed the most and carry the most load.

However, one argument against this method is that any compression of the gap elements is not present in the actual case. The actual test assembly did not have gap elements in between the threads that compressed some finite amount. The overall displacement of the finite element model would then include the compression of the gap elements in between the threads as well as the deflection of each thread. This method may lead to an overall spring rate of the finite element model that was less than the actual.

Summary of Procedure

First, the model developed using gap elements with finite stiffness is presented. As will be shown, this method used gap element stiffness values that approximated the stiffness of a thread.

Secondly, models using gap elements with other values - namely an extremely high assigned value (nearly rigid) and zero, which is one assigned by the FEA package will be presented.

The results of each will be compared to the results from the experimental portion of the project.

CHAPTER 2

FINITE ELEMENT MODEL OF TEST ASSEMBLY WITH GAP ELEMENTS OF FINITE STIFFNESS

For introduction, the model developed using gap elements with finite stiffness is presented first. As was stated earlier, the shortfall of this method is that the gap elements in between threads compress some amount. This compression is not present in real life. However, it is interesting to compare the results obtained with this method to the results using near rigid or unassigned stiffness gap elements.

Determination of Gap Element Stiffness

The gap element stiffness values for the complete model were determined by modeling a single thread.

For the single thread model, a pressure distribution was applied to the base of the screw thread. The nut thread was fixed in the vertical direction. Near rigid gap elements were used to transmit the force between the screw and nut thread. The stiffness of the threads was calculated by dividing the force in the gap element by the vertical

displacement of the nodes. Figure 7 shows the single thread model.

The vertical deflection of each node was compared to the vertical displacement of a node at the base of the thread root, adjacent to the gap element node. In the unstressed geometry, these two nodes differed in location only in the horizontal, or Y-direction. After applying a load, the vertical displacement difference was used as the actual deflection of the thread node due to the vertical force exerted on it by the gap element force. In other words, the entire model of the single thread was displaced some amount by the force exerted at the base of the model. But the node on the thread was displaced a greater amount due to the additional deflection of the thread.

The screw and nut threads were considered to behave as two springs in series. An equivalent spring rate was then found for each gap element node. These were the values used as the gap element stiffness. Table 4 lists the deflections and forces found at each gap element node. The calculated stiffness for the screw, nut and total are then listed.

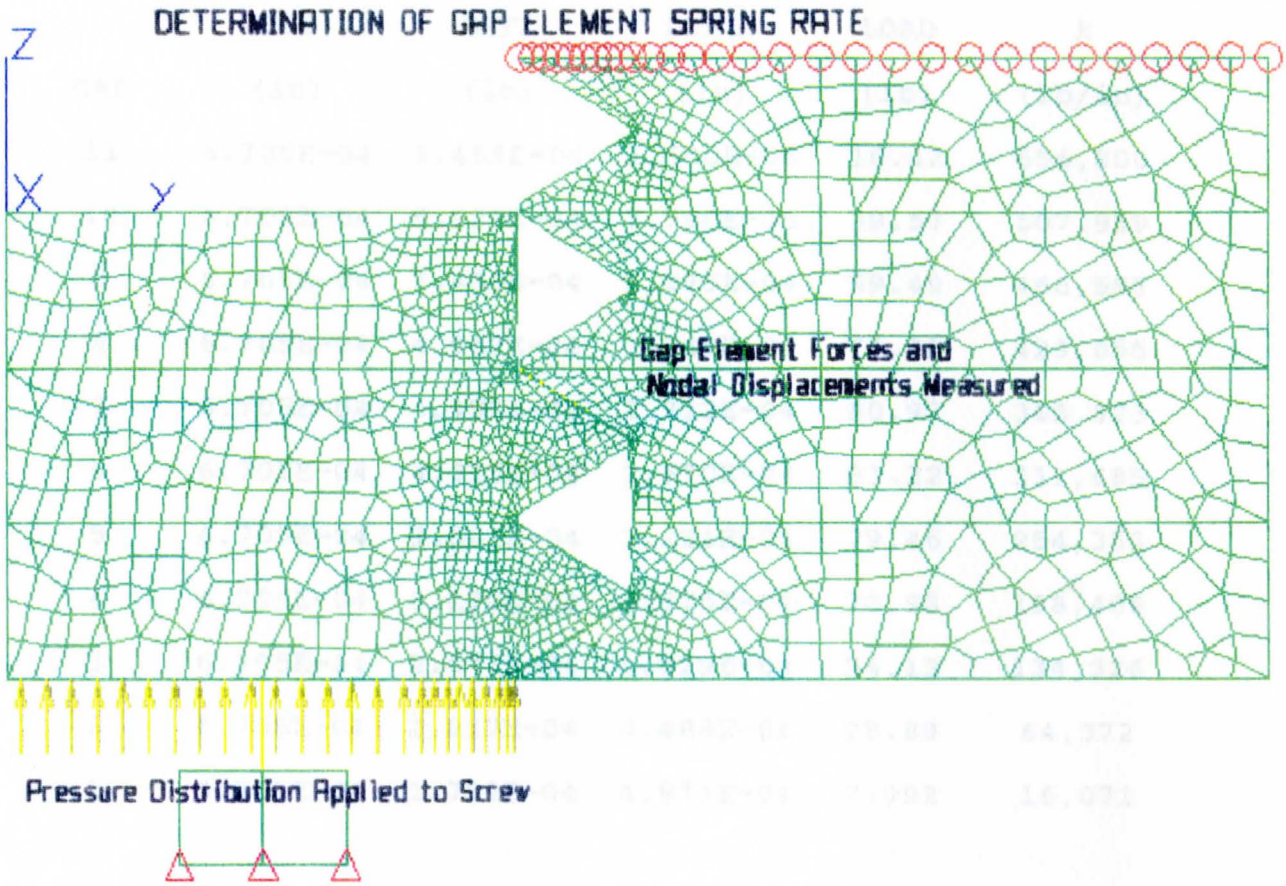

Figure 7. Single Thread Model to Determine Gap Stiffness

Table 4. Determination of Gap Element Stiffness

SCREW THREAD

GAP	SCREW BASE DEFL. (in)	SCREW THREAD DEFL (in)	NET SCREW DEFL. (in)	LOAD (lb)	Screw k (lb/in)
11	6.705E-04	6.455E-04	2.500E-05	16.42	656,800
10	6.705E-04	5.926E-04	7.790E-05	39.57	507,959
9	6.705E-04	5.430E-04	1.275E-04	59.49	466,588
8	6.705E-04	4.957E-04	1.748E-04	73.95	423,055
7	6.705E-04	4.493E-04	2.212E-04	80.92	365,823
6	6.705E-04	4.035E-04	2.670E-04	83.22	311,685
5	6.705E-04	3.581E-04	3.124E-04	79.46	254,353
4	6.705E-04	3.130E-04	3.575E-04	70.93	198,406
3	6.705E-04	2.676E-04	4.029E-04	54.12	134,326
2	6.705E-04	2.217E-04	4.488E-04	28.89	64,372
1	6.705E-04	1.732E-04	4.973E-04	7.992	16,071

Table 4 - Continued

Determination of Gap Element Stiffness

NUT THREAD

GAP	NUT BASE DEFL.	NUT THREAD DEFL.	NET NUT DEFL.	LOAD	Nut k
11	1.640E-04	6.439E-04	4.799E-04	16.42	34,215
10	1.640E-04	5.886E-04	4.246E-04	39.57	93,194
9	1.640E-04	5.371E-04	3.731E-04	59.49	159,448
8	1.640E-04	4.883E-04	3.243E-04	73.95	228,030
7	1.640E-04	4.412E-04	2.772E-04	80.92	291,919
6	1.640E-04	3.951E-04	2.311E-04	83.22	360,104
5	1.640E-04	3.502E-04	1.862E-04	79.46	426,745
4	1.640E-04	3.059E-04	1.419E-04	70.93	499,859
3	1.640E-04	2.621E-04	9.810E-05	54.12	551,682
2	1.640E-04	2.189E-04	5.490E-05	28.89	526,230
1	1.640E-04	1.724E-04	8.400E-06	7.992	951,429

Table 4 - Continued

Determination of Gap Element Stiffness

Gap Element	Equiv. k (lb/in)
1	32,521
2	78,746
3	118,837
4	148,167
5	162,360
6	167,075
7	159,366
8	142,030
9	108,024
10	57,356
11	15,804

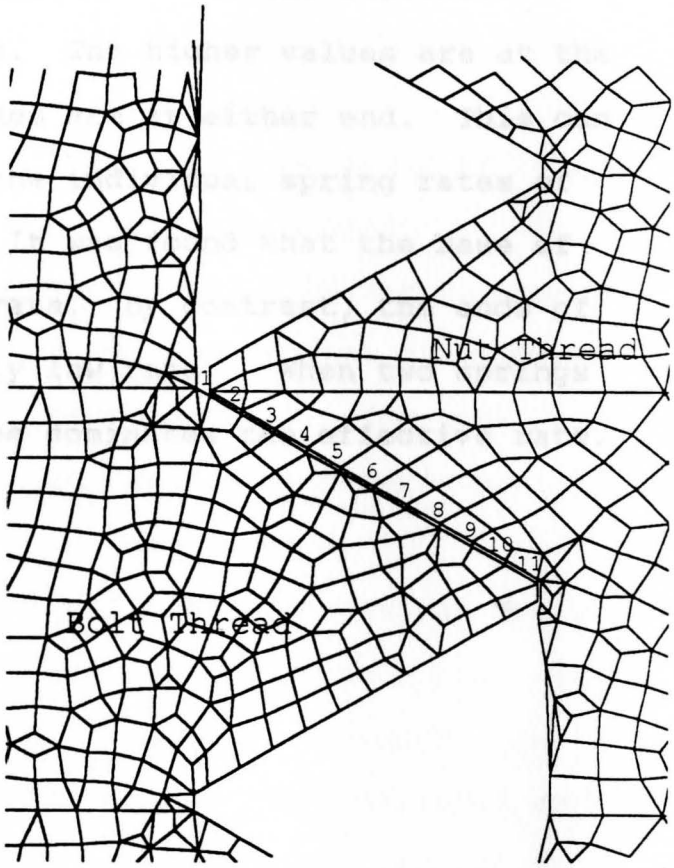

Discussion of Gap Element Stiffness Values

The average value for gap element stiffness by this method was 108,208 pounds per inch. The lowest value was 15,804 at the gap element located at the tip of the screw thread and base of the nut thread. Note the stiffness values along the thread face. The higher values are at the center, while the lower values are at either end. This can be understood by examining the individual spring rates of the screw and nut threads. It was found that the base of the thread has a very high rate. By contrast, the ends of the threads have a relatively low rate. When two springs are in series, the softer one dominates the effective rate.

Determination of Model Spring Rate

The overall spring rate of this model was found to be 2,160,983 pounds per inch, which is 32% greater than the overall spring rate found by experimental methods on the physical test assembly. This result was for a model which had 8 engaged threads.

The overall spring rate of the model was found by dividing the applied force by 2 times the overall displacement of the finite element model. It was necessary to multiply the displacement by two because the drawn model represented half the physical test assembly. The test assembly was symmetric about the vertical and horizontal centerlines. Refer the figure 3 and figure 6.

In addition, the model was modified such that it had 9 engaged threads. The overall spring rate in this case was 2,310,584 pounds per inch. This was done to compare the percent load each thread carried to previous published work. This additional analysis is presented with the results from models using other values of gap element stiffness. This method will be referred to as "Finite Gap Element Stiffness".

CHAPTER 3

FINITE ELEMENT ANALYSIS USING GAP ELEMENTS WITH NEAR RIGID AND UNASSIGNED STIFFNESS

Gap Elements with Unassigned Stiffness

Ideally, the gap elements in between the screw and nut threads should serve only to transmit the force from the screw to the nut threads when a force is applied to the screw. With this in mind, the finite element model was modified by not assigning a stiffness value for gap elements. Since each thread was drawn geometrically identical, it was specified that no gap space existed between the threads. In other words, the model was run with the threads in contact with each other initially.

The overall spring rate of the model was found to be 2,309,469 pounds per inch. This value was 41% greater than the 1,632,932 pounds per inch overall spring rate of the test assembly found by experimental means. This was for the model with 8 engaged threads. The overall spring rate for the model with 9 engaged threads was found to be 2,495,840 pounds per inch.

Gap Elements with Near Rigid Assigned Stiffness

If the gap elements in the previous case only transmitted the force between threads, then the same overall spring rate should be found if the gap elements were nearly rigid and did not compress. The above mentioned models were modified such that nearly rigid gap elements were used. The actual value of the stiffness that was considered to be nearly rigid was 10,000,000 pounds per inch. The overall spring rate resulting from this method was 2,497,992 pounds per inch for the 9 engaged threads model. This is virtually identical to the spring rate of 2,495,840 pounds per inch found with unassigned stiffness gap elements. It was found that the software assigns an effectively near-rigid value to the stiffness when the input is not assigned. The overall spring rate for the model with 8 engaged threads was found to be 2,309,469 pounds per inch, the same as for unassigned stiffness gap elements.

This suggests that all of the load is being transmitted through the gap elements and the spring rate of the threaded section is a result of deflection of the threads and compression of the body only.

CHAPTER 4

COMPARISON OF DIFFERENT MODELS

Percent Load of Each Thread

For each of the finite element models, the percentage of load on each thread was found to vary. Experimental tests performed by Yakushev[3] on two dimensional photo elasticity models also determined the percentage of load on each thread. This data is shown in column A of Table 5.

Note that with the finite element models in compression, the percentage of load in the first thread is significantly lower than the results found by Yakushev.

Also note that the percentage of load for the last two threads slightly increases. It is assumed that this is a result of compression and that end effects caused the slight increase. End effects is the stress distribution near the nut face that is restrained in the vertical direction. The restraint simulates the reaction against the machine test platen.

---

[3] A. I. Yakushev, Effect on Manufacturing Technology on the Strength of Threaded Connections. (New York, New York: The MacMillan Company, 1964)

Table 5. Test Results of Percentage Load Carried by Each Thread of a Fastener. Various Methods

	Percentage of Load			
	Method			
Thread	A	B	C	D
1	34.00%	15.95%	16.53%	30.09%
2	22.70%	13.95%	13.78%	20.41%
3	15.10%	11.57%	11.82%	14.60%
4	11.00%	10.14%	10.54%	10.91%
5	6.80%	9.37%	9.78%	8.45%
6	4.50%	9.18%	9.42%	6.70%
7	3.00%	9.46%	9.39%	5.28%
8	2.00%	10.08%	9.53%	3.57%
9	1.30%	10.21%	9.25%	

Method A = Photo elastic Method, Tension

Method B = Finite Element, Compression, Rigid Gap Element Stiffness

Method C = Finite Element, Compression, Finite Gap Element Stiffness

Method D = Finite Element, Tension, Rigid Gap Element Stiffness

Since the results of the models with gap elements of near rigid or unassigned stiffness were the same, only the results for the models with near rigid gap elements are listed.

Noting the effect produced on the last two threads, the model was modified to be loaded in tension. Because of the way the model was drawn, only eight threads were engaged when it was loaded in tension. After reviewing the results, it was judged that the difference in percent loading per thread would not significantly differ between eight and nine engaged threads. The results are shown in Table 5, Method D. Note that the results are much closer to the photo elastic results. In compression, the nut is forced to have load over its entire surface. In tension, the load can track to the threads.

The third column, method C shows the results obtained with the model using gap elements of finite stiffness. Note the results are approximately the same compared to the model in compression with rigid gap elements.

Effect of Number of Engaged Threads on Overall Spring Rate

As was stated earlier, the overall spring rate of the finite element model with unassigned gap element stiffness, eight engaged threads was 2,309,469 pounds per inch. This was 41% greater than the overall spring rate of the test assembly determined experimentally.

The overall spring rate of the finite element model with nine engaged threads was found to be 2,495,840 pounds per inch which was 53% greater than the experimental results.

The finite element model was modified such that seven threads were engaged in compression. The overall spring rate of the model was found to be 2,136,752 pounds per inch or 31% greater than the experimental value of 1,632,932 pounds per inch.

Comparison of Actual Measured Thread Form and Maximum Material Condition on Overall Spring Rate

To determine if the difference in the overall spring rate between the experimental method and the finite element method may have been caused by incorrectly measuring the actual dimensions of the threads, the finite element model was redrawn with maximum material condition, class 2 fit. The models were drawn with nine engaged threads.

Table 6 shows the major and minor diameters of the threads as well as the overall spring rate of the finite element model.

Table 6. Comparison of Overall Spring Rate of Finite Element Model Using Maximum and Actual Material Conditions.

	Maximum Mat'l Cond.	Actual
Screw Major Dia.	1.498"	1.485"
Screw Minor Dia.	1.293"	1.220"
Nut Major Dia.	1.500"	1.487"
Nut Minor Dia.	1.320"	1.230"
Overall Spring Rate (lbs/in.)	2,467,868	2,497,992

Note the differences between the screw and nut diameters. The test assembly thread form has a closer tolerance between the screw and nut than does the maximum material condition. For the test assembly, the difference between the minor diameters is less than the maximum material condition. This may explain why the overall spring rate for the test assembly was slightly higher than for the maximum material condition. However, the difference is only 1.2%. The important result to note was that the difference in the overall spring rate was not significant.

Based on these results, it was concluded that the difference in the overall spring rate between the

experimental and finite element models was not due to inaccuracy in the measurement of the threads.

Stress Distribution in Threads

The stress distribution in the threads were analyzed. The model chosen was of compression with seven engaged threads because it was the most stressed. The maximum Von Mises stress occurs at the bottom side of the root of the first thread in the screw. Figure 8 is a stress plot of the area of the first thread.

An estimate of the maximum Von Mises stress was found to be 37,780 psi. The stress in the shaft of the screw was 7,074 psi. The maximum stress in the first thread root was 5.34 times the stress in the diameter of the screw. For a more precise examination of the stress near the thread roots, a radius with additional elements would need to be added in the root. This would change the value of maximum stress.

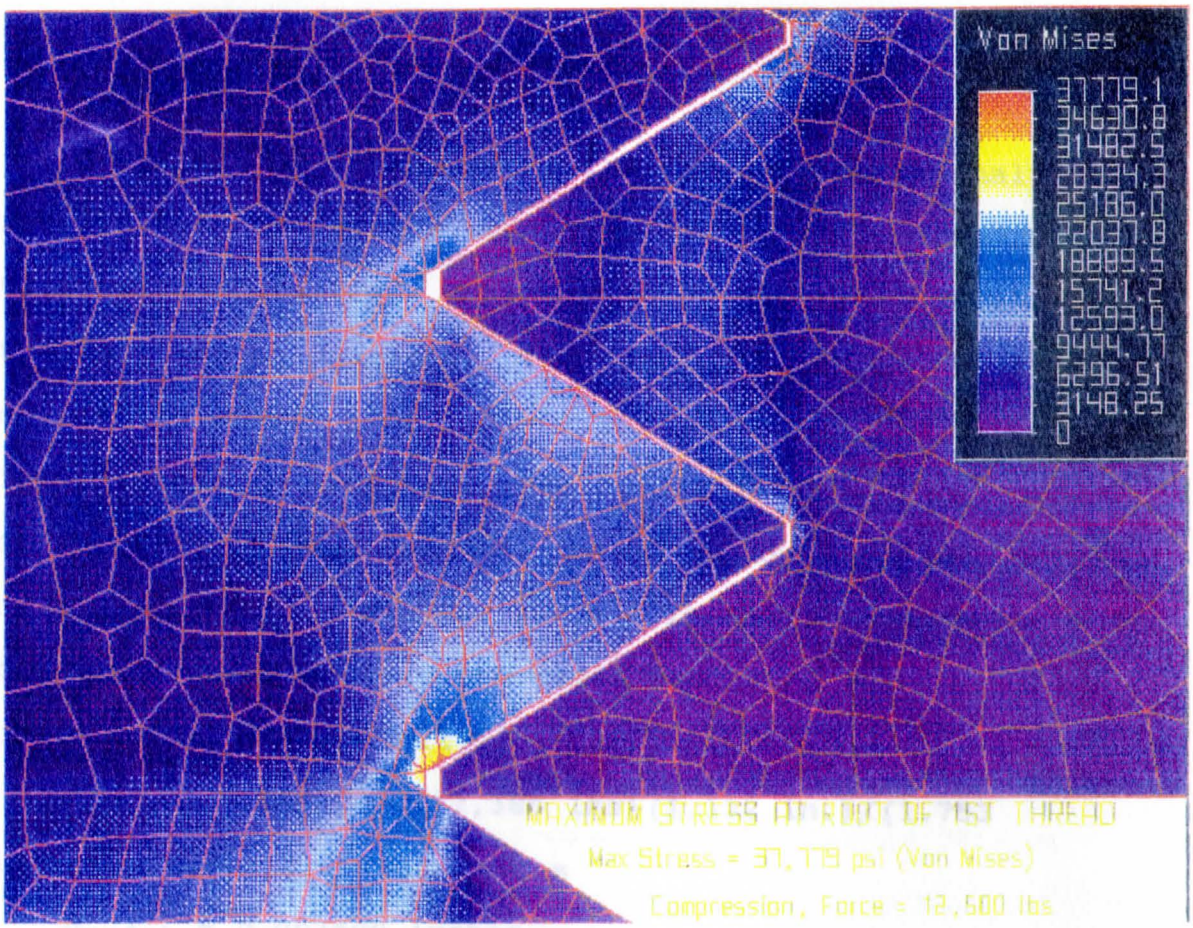

Figure 8. Stress (Von Mises) Plot of First Thread Region

CHAPTER 5

COMPARISON OF FINITE ELEMENT ANALYSIS WITH THEORETICAL ANALYSIS

To verify the accuracy of the finite element analysis, results from the models were compared to values predicted by theoretical formulas. Compression of the smooth shank of the bolt can be examined. The first section of the finite element model was a cylinder 1.132 inches in length and 1.494 inches in diameter. See Figure 1. The displacement of this unthreaded portion (shank) of the bolt can be found by the equation: $\delta = PL/AE$, where δ is the displacement, P is the applied force, A is the cross sectional area and E is the Modulus of Elasticity.[4]

$\delta_{theory} = PL/AE = (37{,}385 \text{ lbs})(1.132 \text{ in.})/(1.753 \text{ in}^2)(10.3E6) = 0.002344$ inches

$\delta_{model} = 0.002500$ inches

The compression of this section of the model is 6.7% greater than predicted. However, the model has a step down in diameter which forces alterations in the stress distribution.

---

[4] James M. Gere and Stephen P. Timoshenko, Mechanics of Materials. Second Edition. (Boston, Massachusetts: PWS Publishers), p. 49

Because the original experimental model had notches cut into the body which could affect the stress distribution, another model was drawn with simpler geometry. This model was comprised of a smooth non threaded shank and engaged threads only, both of length 0.5 inches. The threaded connection drawn was that of a 1/2-12 UNC threaded screw and nut with nominal dimensions.

Also, the applied loading was in tension rather than compression. Figure 9 shows this model.

The radius of the shank of the screw was 0.1954 inches. The length of the unthreaded portion of the screw was 0.5 inches.

δ_{theory} = PL/AE = (3,141.59 lbs)(0.5 in.) /(0.11995 in.^{2})(10.3E6 psi)

δ_{theory} = 0.001271 in.

The finite element model was drawn similarly to the previous models. The total displacement at the base of the model was found to be 0.002228 inches. The displacement where the threaded portion of the screw starts was 0.001025 inches. The difference between these two values is 0.001203 inches which represents the elongation of the smooth section of the bolt due to the applied tension. This difference is 5.4% less than predicted by theory.

Based on these results, it was concluded that the construction of the model, application of forces and output

of the finite element analysis was a reasonable representation of the physical system, at least in the non threaded portions of the model.

It is interesting to note that the total displacement of this model is 55% greater than the elongation of the shank only. Based on the finite element analysis, the actual spring rate of this threaded connection would be 1,573,155 pounds per inch. But, the estimated spring rate of the connection, which would be based on the shank elongation of the bolt only is 2,471,747 pounds per inch, or 57% greater.

Based on these results, for this particular size fastener, the error in estimating effective spring rate based on the unengaged portion of the fastener only can be in the 50% range.

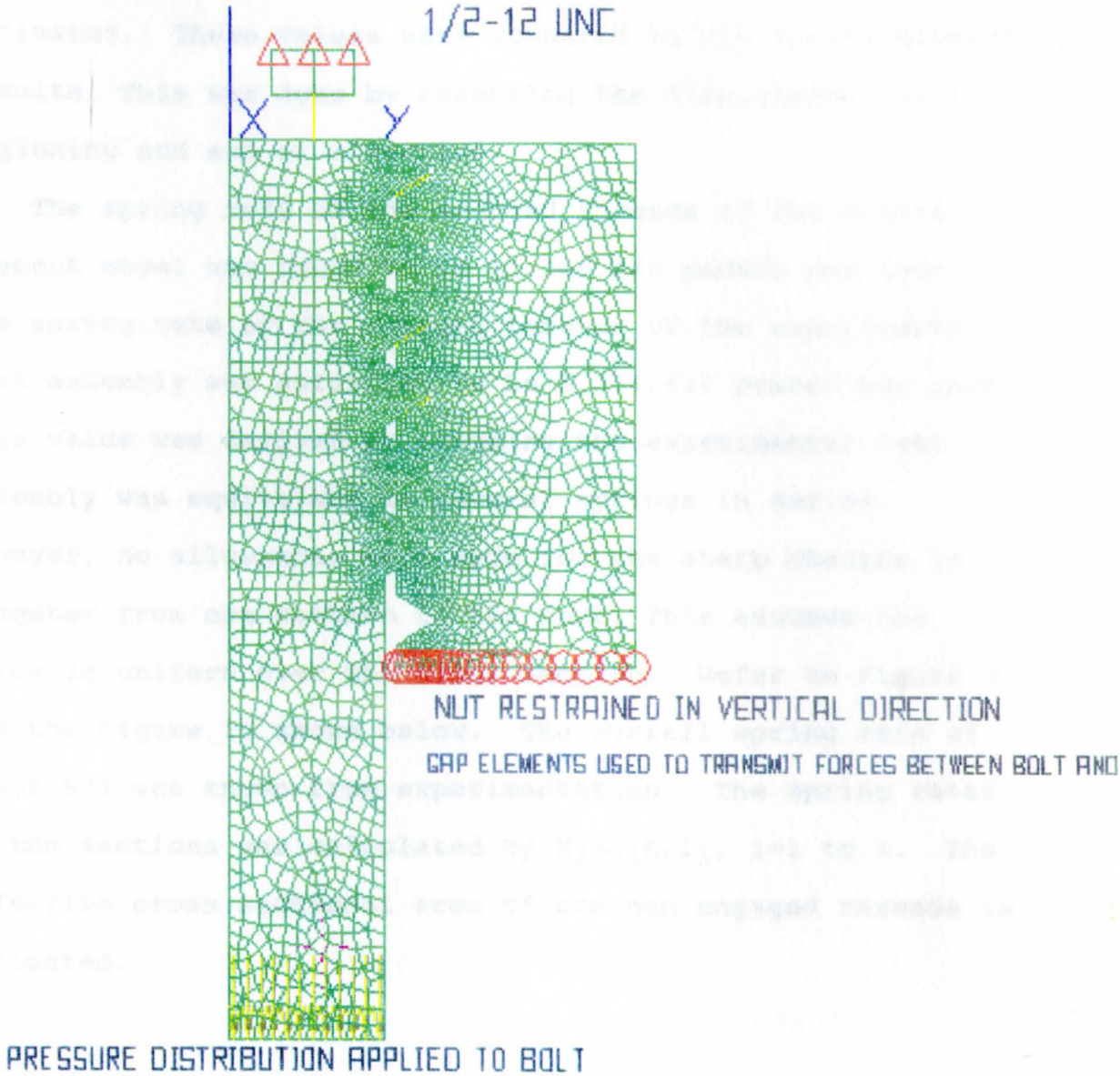

Figure 9. 1/2 - 12 UNC Model

CHAPTER 6

COMPARISON OF SECTIONAL SPRING RATES

The spring rate of each region of the test assembly was estimated. These values were compared to the finite element results. This was done by measuring the displacement at the beginning and end of a section.

The spring rate of the engaged threads of the finite element model was found to be 11,266,243 pounds per inch. The spring rate of the engaged threads of the experimental test assembly was estimated to be 5,334,610 pounds per inch. This value was derived by assuming the experimental test assembly was equivalent to several springs in series. However, no allowances were made for the sharp changes in diameter from one section to the next. This assumes the force is uniform over the cross section. Refer to Figure 3 and the Figure 10 shown below. The overall spring rate of 1,632,932 was known from experimentation. The spring rates of the sections was calculated by $K_i=A_iE/l_i$, i=1 to 4. The effective cross sectional area of the non engaged threads is estimated.

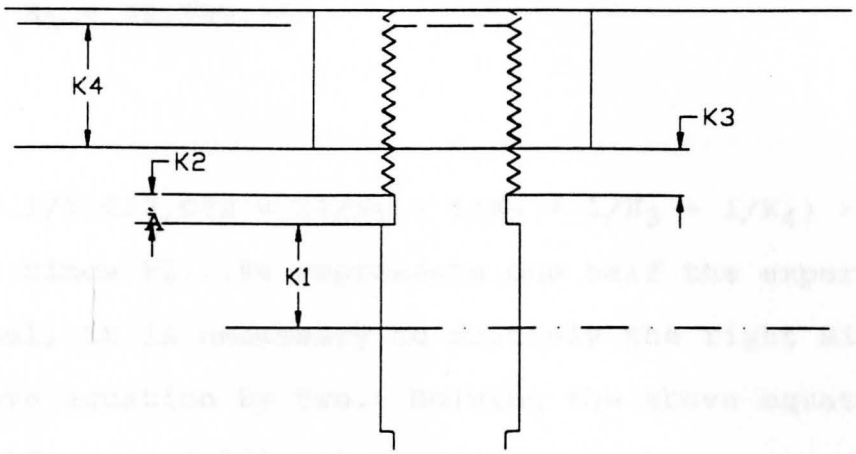

Figure 10. Sections of Test Assembly

$K_1 = (A_1)(E)/l_1 = \{\pi(1.494^2)/4\}\{10e6\}/\{1.132\}$

K_1 = 15,486,192 pounds per inch.

$K_2 = (A_2)(E)/l_2 = \{\pi(1.196^2)/4\}\{10e6\}/\{.326\}$

K_2 = 34,461,537

$K_3 = (A_3)(E)/l_3 = \{1.324\}\{10e6\}/\{.333\}$

where $A_3 = (\pi/4)\{(d_m + d_r)^2/2\}$[5]

d_r = minor diameter of external thread

d_r = 1.220 inches (measured)

d_m = pitch diameter of thread

$d_m = d - 0.649159p$ (estimated)

where d = major diameter = 1.485 inches

p = pitch = 0.16667 inches

d_m = 1.377 inches

A_3 = 1.324 in^2

---

[5] Joseph E. Shigley and Charles R. Mischke, Mechanical Engineering Design (5th ed.: McGraw-Hill Inc., 1989) p. 328

$K_3 = 39,759,760$

$1/1,632,932 = \{1/K_1 + 1/K_2 + 1/K_3 + 1/K_4\} \times 2$

Since K1...K4 represents one half the experimental model, it is necessary to multiply the right side of the above equation by two. Solving the above equation for K_4 yields $K_4 = 5,334,610$ pounds per inch.

Table 7 lists the various spring rates.

Table 7. Comparison of Spring Rates of Regions of Test Assembly - Finite Element vs Estimate Based on Geometry

REGION OF MODEL	FINITE ELEMENT (lbs/in.)	ESTIMATE BASED ON GEOMETRY (lbs/in.)
K1	13,611,615	15,486,192
K2	41,724,618	34,461,533
K3	29,985,008	39,759,760
K4	11,666,343	5,334,610

The spring rate of the engaged threads, K4 of the model with finite gap element stiffness was found to be 9,827,800 pounds per inch, or 84% greater than the experimental method.

CONCLUSIONS

The results of the experimental portion indicate that the force versus displacement curve of the test assembly was slightly non linear in the range of force that was tested. One possible cause of this non linearity may have been due to slight eccentric loading. Eccentric loading has the effect of lowering the overall effective spring rate of the test assembly.

Another factor may have been due to imperfections in the machining of the components. Each thread may not have matched up exactly to the thread on the other component, especially at the lower ranges. This also has the effect of producing non linearity and lowering the overall effective spring rate. Despite efforts to minimize both of these variables, the data indicates that some degree of at least one was present in the trials.

Considering all of the above, if the measured overall spring rate of the test assembly was in error, it would have been slightly underestimated. As was shown, the finite element analysis of the test assembly produced higher values for the overall spring rate. The results of the finite element model was approximately 40% higher than the experimental results.

When the above mentioned factors that could affect the overall spring rate were considered, it was concluded that

the finite element results were reasonably close to the experimental results.

It was found that using gap elements to transmit the forces between screw and nut worked satisfactory. The stiffness of the gap elements could be either near rigid or unassigned, because the software treats these as the same. It was shown that a complex method of assigning stiffness values to the gap elements did not result in an appreciable difference.

With this method, the distribution of load from one thread to another is in agreement with previously published results.

This method can be used to develop empirical formulas for estimating the effective spring rate of a connection for various fastener sizes and lengths of engagement - especially if preload was low or zero.

This method may be useful in the design of fasteners or verification of stress levels in thread roots.

RECOMMENDATIONS FOR FUTURE STUDY

In this study, when a gap space between the threads was specified for all the gap elements, the model did not converge. Therefore, it is recommended to use a non linear finite element analysis package for these models. The non linear analysis would recalculate the stiffness matrix incrementally and include the effect of deformation in the threads.

Also, the finite element models drawn for this project had identical thread forms and pitch for the screw and nut threads. Each thread matched up exactly to another. In real life, thread forms are rarely exact. It is recommended that the models be slightly modified such that the thread pitch differs from screw to nut by a small amount. In this way, the first threads can be in contact and the latter threads will have some gap between them. A specified gap between the threads can be assigned in the software.

Also, thread forms that do not mate perfectly against one another should be investigated. For example, the thread angles could be varied by a small amount. The overall spring rate should be compared by imposing various slight modifications as suggested.

BIBLIOGRAPHY

Books

Gere, James M. and Timoshenko, Stephen P. Mechanics of Materials, Second Edition. Boston: PWS Publishers, 1984

Shigley, Joseph E. and Mischke, Charles R. Mechanical Engineering Design, Fifth Edition. New York: McGraw-Hill, 1989

Yakushev, A. I. Effect of Manufacturing Technology on the Strength of Threaded Connections. New York, New York: The MacMillan Company, 1964

REFERENCES

Books

Bickford, J. An Introduction to the Design and Behavior of Bolted Joints. New York, New York: Marcel Dekker, Inc., 1990

Blake, A. Threaded Fasteners, Material and Design. New York, New York: Marcel Dekker, Inc., 1986